COLUMBIA WINCHES & HOISTS

Manufactured by Allied Power Products, Inc.

DIMENSIONAL REFERENCE

HG SERIES

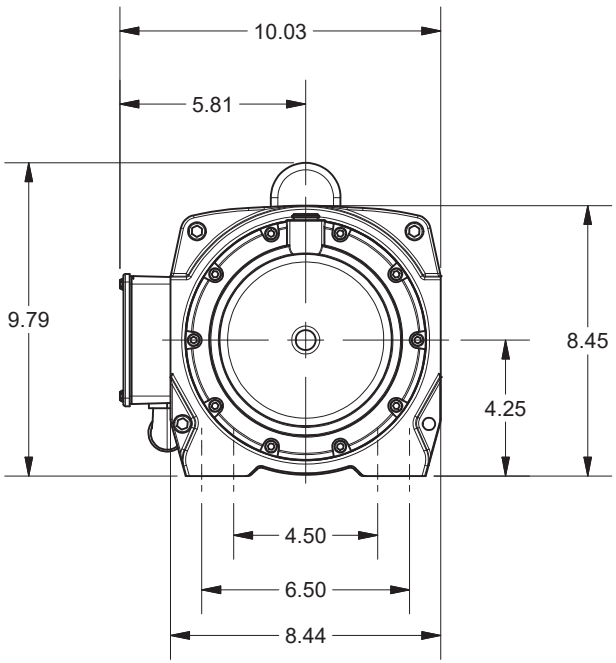

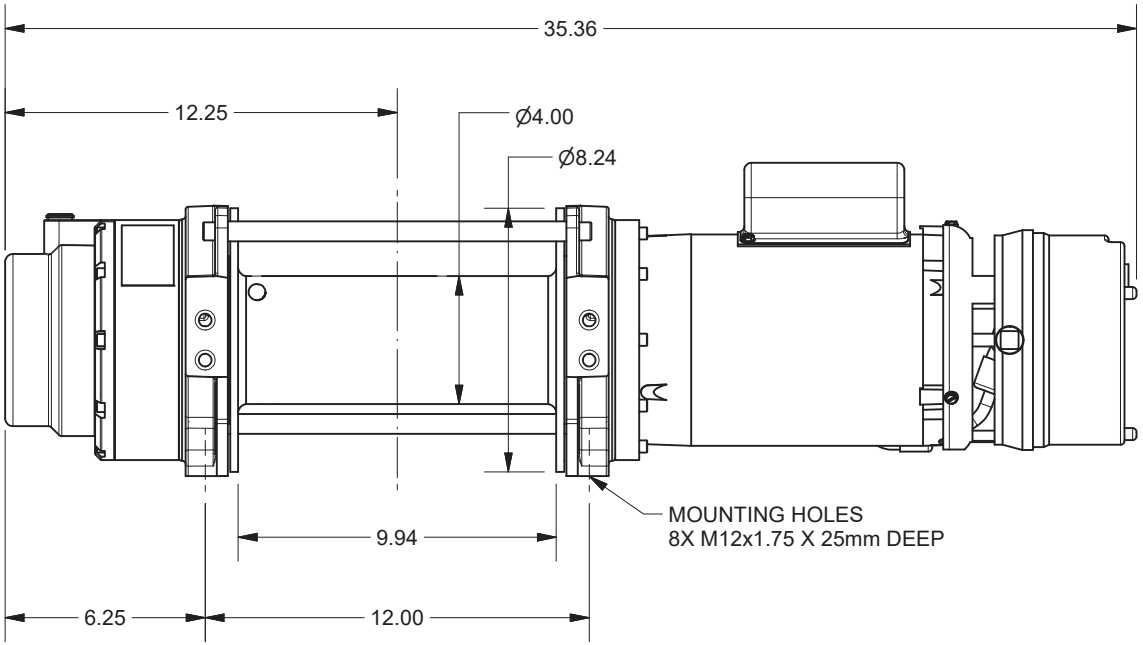

This drawing is NOT certified. All dimensions are subject to change without notice.

This print is the property of Allied Power Products, Inc. and may not be used in any manner detrimental to their interest.

alliedpower.com

AC1HG24-02

Distributed by:

ALLIED POWER PRODUCTS, INC.

THE WINCH & HOIST SPECIALISTS

6590 SW FALLBROOK PLACE, BEAVERTON, OR 97008

(503) 626-0654 FAX (503) 646-1996