COLUMBIA
WINCHES & HOISTS
Manufactured by Allied Power Products, Inc.

DIMENSIONAL REFERENCE

WF SERIES

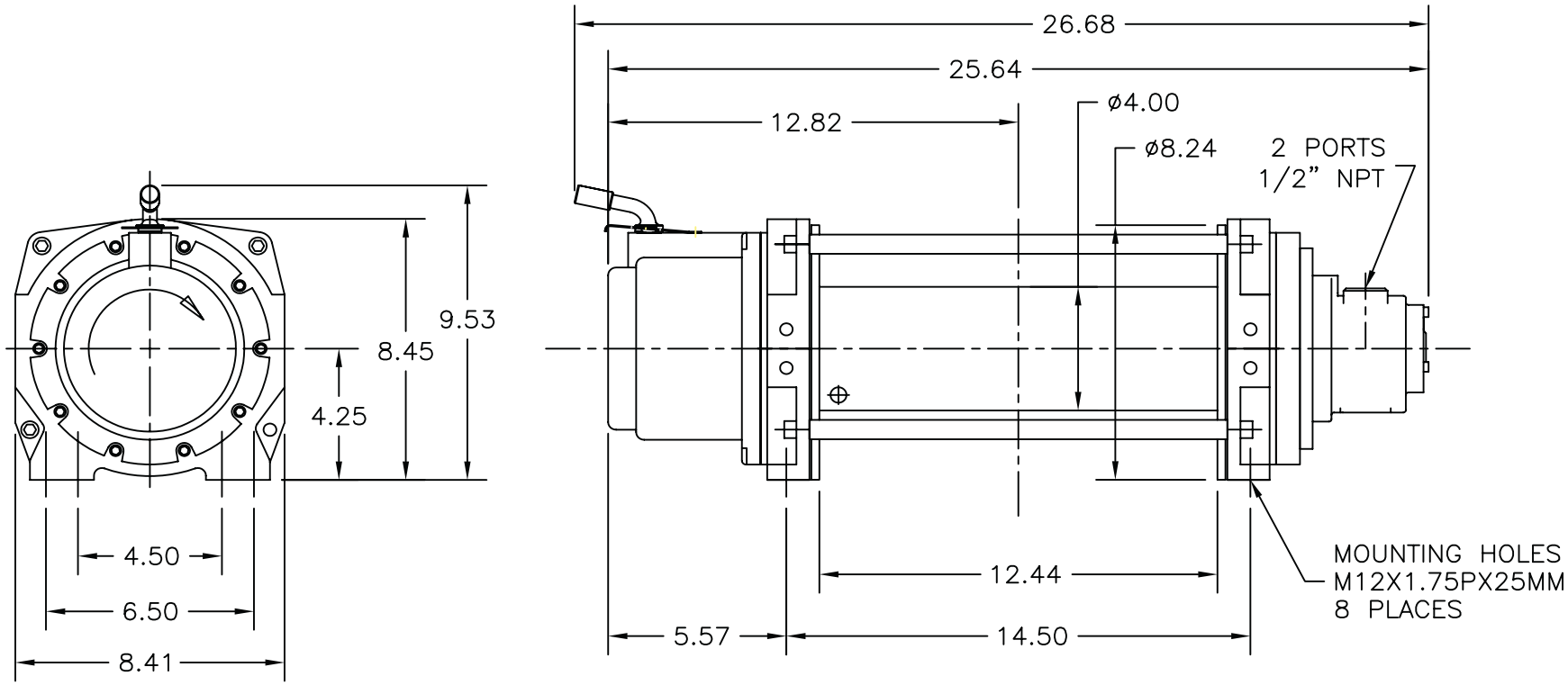

This drawing is NOT certified. All dimensions are subject to change without notice.

This print is the property of Allied Power Products, Inc. and may not be used in any manner detrimental to their interest.

alliedpower.com

PNWF18-03

Distributed by:
ALLIED POWER PRODUCTS, INC.
THE WINCH & HOIST SPECIALISTS
6590 SW FALLBROOK PLACE, BEAVERTON, OR 97008
(503) 626-0654 FAX (503) 646-1996